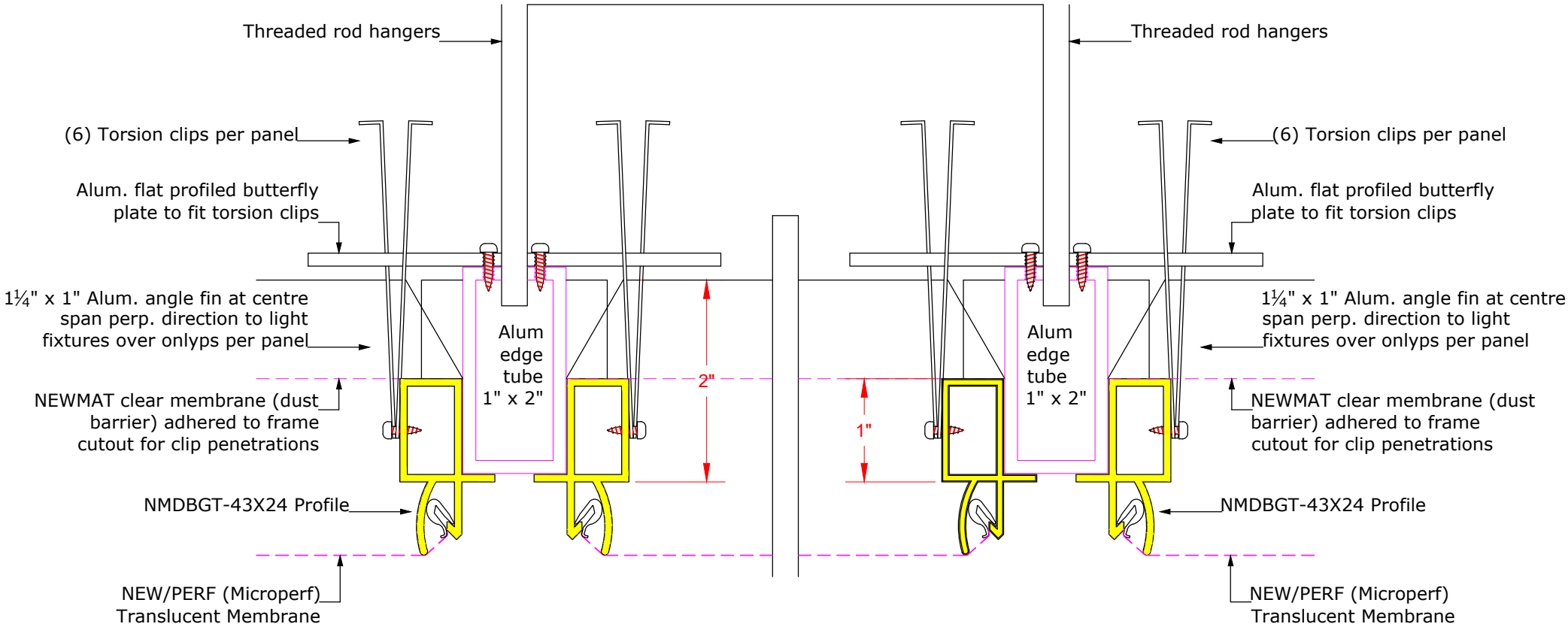

Translucent Panels on Torsion Clips - Detail ATP-1